BSLBATT®
Best Solution Lithium Battery

B-LFP24-72AWP

MOBILE ELEVATED WORK PLATFORM

SAFELY RELIABLE, DURABLE BATTERIES FROM THE NAME YOU TRUST



Overview

BSLBATT scissor lift lithium batteries are designed and manufactured in China, compatible with hybrid fleets from brands such as JLG, Genie, Power-Lift, HSS, Hewden, Skyjack, Holland, **Niftylift, and Snorkel. From superior cell and battery design to** intelligent built-in diagnostics, BSLBATT offers a range of advanced safety, environmental, and electronic features that competitors simply don't provide. With an expected lifespan of over 8,000 cycles, BSLBATT batteries deliver an outstanding return on investment.

CELL SELECTION

- Proven safest chemistry
- Longest life in its class
- Highest capacity in its class
- China-based cell development
- BSLBATT-specific cell
- UN38.3; UL1973; IEC 62133 ; UL2580

BATTERY DESIGN

- Easy replacement for lead-acid
- Metal case, Ip65 rating
- Automotive-grade safety protection
- Current sensor, fuse, temp. sensor
- Validated charger compatibility

ELECTRONICS

- Visual SOC gauge
- Microprocessor-based controls
- CAN-communications
- China-based development

Specifications

- Model: B-LFP24-72AWP
- Nominal voltage: 25.6V
- Nominal capacity: 72AH

INTELLIGENCE FEATURES

- Microprocessor
- CAN Commuications
- SOC Gauge
- Cell Balancing
- Battery Management System

THE BSLBATT ADVANTAGE

- World's leading manufacturer of advanced Lithium modular battery technology
- Worldwide reputation for best return on investment, durability, performance, and quality components
- Outstanding technical and customer service
- Industry leader in health and safety compliance as well as environmental stewardship

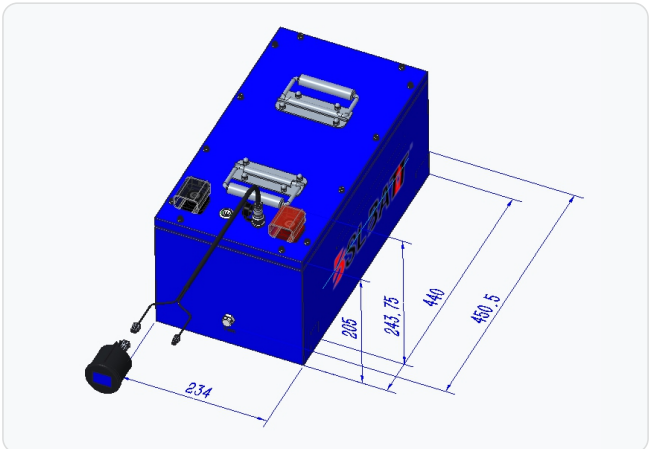

APPLICATIONS

Item		Parameter
Rated Capacity		72Ah
Nominal Voltage		25.6V
Supply Voltage		20V~20.9V Single battery:2.5V ~ 3.65V
System Capacity		1,843Wh
Battery Group Solution		8S1P A boxful
Storage Temperature		0℃~+35℃
IP Protection Level		Battery system IP65
Operating Temperature	Charge	0℃~+55℃
	Discharge	-20℃~+60℃
Standard Charging Current is Recommended		≤20A
Maximum Continuous Charging Current		36A
Maximum pulse charging current (1S)		54A
Continuous Discharge Current		72A
Maximum Discharge Current (10S)		150A
Cycle Life		≥4000@ 80%DOD
Battery System Weight		21 kg
Dimension		17.32*9.21*9.65（440*234*245）

TO 70% INITIAL CAPACITY

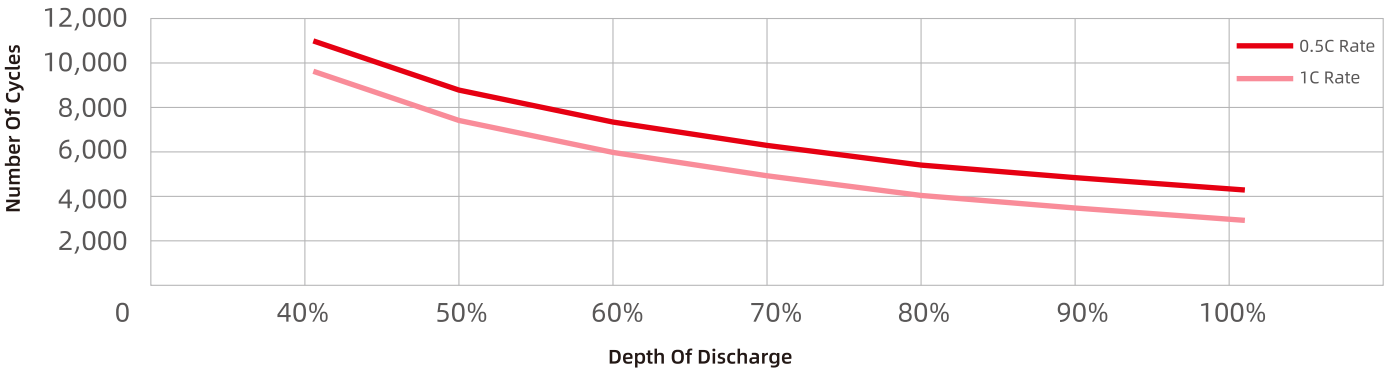

ABOUT BSLBATT

We've been in the battery business for over 20 years and have learned how to build on success. Partner with BSLBATT and we'll work closely with you to build on yours. Not just by supplying batteries, but also with unmatched service, training and on-going support. Our product is batteries, but our business is relationships and helping you succeed.